SOLAR HEATED AIR SYSTEM

A. DESCRIPTION

1. Technical background

This invention is related to solar energy harvesting technologies, particular heating air and storing the obtained heat for future use.

The use of energy for domestic and industrial is one of the inevitable actions that human being must fulfil. Heat energy is the main source of energy in many industrial and domestically applications. It is in this regard that there are several ways in which this energy can be obtained. It is a fact that human being and industries cannot sustain without heat energy. There are several sources of heat energy which could be used for industrial and domestic use including the traditional energy sources such as firewood and charcoal, electricity, gas and solar energy.

The use of solar heat energy involves the use of direct solar by making use of parabolic solar concentrators. The heat energy harvested can be used domestically to cook, heat, or sterilize foods and drinks while in industry it can be used to generate steam for electric generation, sterilization of various material as per their use and requirements and other industrial purposes. Domestically, the cookers use direct sunlight to heat foods. These devices may be simple and low-tech or very complex. Anywhere, where direct sunlight is available is a potential place to use a solar cooker or solar oven. One of the disadvantages of solar cookers is that it is an outdoor cooking.

Several attempts have been carried out to develop indoor technologies for domestic and industrial use which will make use of solar energy using heat carrying media such as water to steam then transferred for indoor use domestically and industrially. The

challenge is that, utilization of heat harvested from the sun can only be carried out during day time while there is sun but during night this method cannot be applied and also if applied in during cloudy or rainy days, its efficiency is very low. Overall, the sun emits about 7,000 times more energy than is required for human consumption. Presently, the total amount of solar energy consumed for human use is less than 1% of our entire energy requirements. This means that an incredible amount of energy is still waiting to be captured and stored for use in nights and cloudy days. In this regard, still, there is a need to look for other solutions to facilitate cooking at all times using the solar energy.

2. Prior Art

In searching for the prior art to find what is known prior to the present invention, scarce information was found for system for storing heat from solar energy source for future use. However, the information for collection of solar energy for heating are available.

For example, Patent No. CN2009100444707A of 2009-09-30, is providing for a hot air-drying system heated by double energy sources. The invention discloses a hot air drying system heated by double energy sources, which comprises a heating chamber with a fresh air opening, a drying chamber, a solar heating device, an air source heat pump and a condenser fan of the air source heat pump, wherein the upper part of the heating chamber or the drying chamber is provided with a dehumidifying opening; a condenser and the condenser fan of the air source heat pump are arranged in the heating chamber; a hot water heat exchanger of the solar heating device is arranged at the front end of an air inlet of the condenser in the heating chamber; the condenser fan supplies air in an induced draft way; the ratio of the heat exchange area of the condenser to the input power of a compressor is 5.3 to 11 m<2>/kW; the ratio of the heat exchange area of the hot water heat exchanger to the input power of the compressor is not less than 1.5 m<2>/kW; and the total pressure of

the condenser fan is 100 to 400 Pa. The hot air-drying system heated by the double energy sources makes full use of solar energy as a hot air heat source for drying, solves the problems of the independent use of the solar energy, achieves high energy efficiency ratio by adopting the air heat pump as the hot air heat source, is energy-saving, environmentally-friendly and low in running cost, and manifests the advantages of the combined use of the air source and the solar energy in oven-drying.

The drawbacks of this invention is that it will function only when the sun is available, there no storage of the hear for future use.

Another example is Patent No. CN202011084387.5A, of 2020-10-12, which provides for a compressed air energy storage and supply device. The invention discloses a compressed air energy storage and supply device which comprises a compressor, a motor, an expander, a generator, a gas storage chamber, a high-temperature heat storage tank, a low-temperature heat storage tank, a heat exchanger group and a throttle valve group, wherein heat insulation layers or heat preservation layers are arranged on the gas storage chamber, the high-temperature heat storage tank, the low-temperature heat storage tank and a transmission pipeline. The device makes full use of surplus energy of clean energy such as solar energy, wind energy and the like, realizes zero carbon emission in the energy generation and conversion processes, does not cause environmental pollution, and is favorable for constructing a comprehensive energy system with low carbon, cleanness and environmental protection. The cascade energy storage and cascade utilization of different grades of heat energy are fully considered, wherein high-grade (high-temperature) heat energy can be used for advanced adiabatic compressed air energy storage turbine power generation, high-temperature steam generation and the like, medium-grade (medium-temperature) heat energy is used for heating residents, low-grade (low-temperature) heat energy is used for absorption

refrigeration, and the comprehensive utilization efficiency of energy can be effectively improved.

The drawback of this inventing is that the source of heat is not direct from the sun rays. It involves heat system run by electricity.

It is in this regard, that there is a need to develop other systems which would collect heat directly from the sun rays, provide the heat for use in domestic or industry and stored for future use when need be.

3. Problem to be solved

The biggest disadvantage of using heat energy from solar is that it is dependent on sunlight as a result, you cannot use heat energy harvested from sunlight at night. Besides, rain, low sunlight penetration, cloudy weather, etc. also serve as impediment to rely on solar energy. Moreover, during carrying out domestic activities such as cooking, one needs to be careful while using a solar cooker, as accidental reflection of sunlight into your eye can damage your eyesight. One needs to find a suitable place in the house to place a solar cooker, where the sunlight reception is maximum.

Despite of all these disadvantages of using direct solar energy in social and economic activities, but carrying out these activities using the solar energy is clean and could involve little cost after a system for these activities has been established. It is in this regard, that there is a need to look for alternative ways to utilize the solar energy.

The object of this invention is to provide a solution where the solar energy could be utilized irrespective of it being night or cloudy or rainy day.

Another object of this invention is that the social and economic activities should take place in door and minimizing the utilization of traditional energy sources.

Still another object of this invention is to find a way of storing harvested solar heat for use at any time depending on the needs.

Furthermore, another object of this invention is to enable the social and economic activities to be carried out at any time.

4. Proposed solution (Summary)

The present invention provides for a Solar heated air system (SHAS), comprising: a heat harvesting system to collect the heat energy from solar; a heat absorbing system to absorb heat collected from the heat collector; a heat transferring system for transferring the absorbed heat to the heat buffering system; a heat buffering system for balancing heat on clouding times during the day; a heat exchange system to allow utilization of the stored heat by heating up compressed air in the heat storage tanks; a heat storage system for storing excess heat for later use when in need especially during the night or in on heavy clouded or rainy day; and an air supply system.

In its preferred embodiment, the heat harvesting system, comprises: a parabolic concentrator (any type of solar concentrator can work) for collecting heat energy from the sun rays; a highly heat reflector film at the concave side; a variable angle tilting structure for holding the parabolic concentrator and allowing the parapolice concentrator to follow the sun rays; and a ground structure for mounting the tilting structure.

In still its further preferred embodiment, the heat absorbing system comprises: a big diameter pipe and a small diameter pipe held by plates separating them, arranged in such a way that the plates do not create rooms within the pipes; a heat absorbing material covers up outside of both pipes; a pipes back cover plate with a hole not more than the outside diameter of the small pipe to cover back side of the pipes; an air valve to be placed in pipes back plate for air inside the small diameter pipe when fluid is put

in the system, preferably low vapour pressure fluid; a pipes front cover plate with a diameter not bigger than the outside diameter of small pipe to cover the front side of the pipes; a heat insulated coupling attached to the front end of the pipes which will be used to couple the heat absorbing system and the heat transfer system; and a vacuums valve attached to the outside big pipe to be used to remove air between the big pipe and small pipe chamber so as to create and maintain vacuum inside the pipes.

Furthermore, the heat transfer system between heat absorber system and heat buffering system comprises: a low vapour pressure fluid, preferably low vapour pressure fluid mixed with salty material for transferring the harvested heat from the heat absorber to the heat buffering system; a heat insulated pipe for holding low vapour pressure fluid, preferably low vapour pressure fluid mixed with salty and transferring heat between heat absorber and heat buffering system; and insulated couplings at both ends of the system for connecting the heat absorber system and the heat buffering system.

Yet still in its further embodiment, the heat buffering system comprises: a housing keeping the interconnected tanks surrounded by heat insulation materials; an interconnected tank filled with fluid, preferably low vapour pressure fluid for keeping transferred heat constant, this could be one up to several; a temperature sensor is fixed in the interconnected tank(s); a pressure sensor is fixed in the interconnected tank(s); a buffer pipe connected between heat transfer system, the interconneted tanks and heat exchanger system for transfering heat between the systems and components; and couplings fixed at ends of the buffer pipe to connent the heat transfer system, the tanks and the heat exchanger system.

Furthermore, the heat transfer system between heat buffering system and heat exchanger system comprises: a fluid, preferably low vapour pressure fluid, mixed with salty material or without for transferring the absorbed heat between the heat buffering system and the heat exchanger; a heat insulated pipe for holding fluid, preferably low vapour pressure fluid, mixed with salty material or without or without and transfering

heat between the heat buffering system and the heat exchanger; and insulated couplings at both ends of the system for connecting the heat buffering system and the heat exchanger system.

In still its further referred embodiment, the heat exchanger system comprises: an insulated heat exchanger housing for enclosing heat exchanger components; a cylinder(s) for storing pressurized air; heat exchanger pipe with couplings at the inlet and outlet for coupling the heat transfer system between the heat buffering system and the heat storage system as well in the heat exchanger tanks; a tank(s) filled with low pressure fluid, mixed with salty material or without for immersing a cylinder for storing pressurized air; fins are fixed inside the cylinder to facilitating het exchange; a temperature sensor is fixed in each cylinder; a pressure sensor is fixed in each cylinder; inlet and outlet air pipes fixed at the sides of the heat exchanger housing to the and out of the pressurized air cylinders; a non-return inlet air pressure control value is attached to inlet pipe of the heat exchanger system before pressurized air enters the system; a non-return outlet air pressure control value is attached to outlet pipe of the heat exchanger system before pressurized air leaves the system; inlet and outlet air pipes for connecting the cylinders within the heat exchanger system; and interconnected pipes for condensate collection at the bottom of the cylinder; and a get value to let the condensate out of the system.

Furthermore, the heat transfer system between heat exchanger system and heat storage system comprises: a fluid, preferably low vapour pressure fluid, mixed with salty material or without for transferring the absorbed heat between the heat the heat exchanger system and the heat storage system; a heat insulated pipe for holding fluid, preferably low vapour pressure fluid, mixed with salty material or without and transferring heat between the heat exchanger system and the heat storage system; and

insulated couplings at both ends of the system for connecting the heat exchanger system and the heat storage system.

Yet still in its further preferred embodiment, the heat storage system comprises: an insulated heat storage housing for enclosing heat storage components; a tank(s) filled with pieces of irregular shapes objects capable of absorbing and storing heat which is then filled with low pressure fluid, mixed with salty material or without; an insulated heat transfer pipe with couplings at the inlet and outlet for coupling between the heat exchanger system and the heat storage system; an insulated inlet pipe with coupling at one end and other end connected at the bottom of tank(s), the other end is connected to the insulated heat transfer pipe installed between the heat exchanger system and the heat storage system; a temperature sensor is fixed in each tank; a pressure sensor is fixed in each tank; an outlet air pipes fixed at the top of tank(s) for transferring fluid, and preferably low vapour pressure fluid, mixed with salty material or without to other heat storage units as per heat energy requirements and used for filling in the fluid in the system.

In its further preferred embodiment, the Solar heated air system (SHAS), has an air supply system, which comprises: a powered air compressor by any energy source preferably solar energy capable of supplying enough air to the heat exchange system as per requirements; and air pipes connecting the compressor and a hybrid air filter and drier to ensure that clean and dry air goes into the heat exchanger system.

5. Way(s) of implementation of the invention

The present invention provides for solar heated air system for storing heat for domestic and industrial utilization.

The system could be described thoroughly with the illustrations of FIG. 1 to FIG. 5 as follows below.

In its preferred embodiment, as illustrated FIG.1, heat energy from the sun is concentrated by the parabolic concentrator (1) which is covered by a highly heat reflector film at the concave side. The parabolic concentrator (1) is held by a variable angle tilting structure (2) and mounted to the ground by structure (3). The concentrated heat by the concentrator (1) is then reflected to the heat collector (4). The heat collector pipe is being held up by heat collector holder plate (5) which is attached to the parabolic concentrator (1) by heat collector holder arms (6). The heat collector (4) is made up of two pipes, outside pipe (7) and inside pipe (8). These two pipes are held together in separation by separator plates (9). The separator plates (9) are arrange in such a way that there are no partitions to allow chambers so that there is vacuum balance between outside pipe (7) and inside pipe (8). Heat generated in the vacuum between the outside pipe (7) and inside pipe (8) heats up the low vapour pressure fluid mixed with salty materials or without (10) so as to transfer heat to the buffering system through heat transfer system embedded within the system. The heat transfer system (11) connects the inside pipe (8) and the heat buffer tank heat transfer system (12).

Furthermore, as illustrated in FIG. 2, the heat transfer system (11) connects the inside pipe (8) and inlet of the heat buffer tank heat transfer system (12). which transfers heat from the heat collector (4) to the buffering system tanks (13) which are enclosed within the buffering system housing (14). The buffer system houses (14) has insulation materials (15) and buffer system tanks (13).

Temperature sensor (16) and pressure sensor (17) are fixed inside the buffering system tanks (13) and a held up by temperature and pressure sensors holder (18). Inside the buffering system tanks (13) low vapour pressure fluid mixed with salty material or without (19) is filled. The heat in the low vapour pressure fluid mixed with salty material or without (19), is then transferred by conduction to heat exchanger system through the outlet of the heat transfer buffering system (20).

In its further preferred embodiment, as illustrated in FIG. 3 the heat exchanger system has inlet heat transfer system (21) that receive heat from the heat transfer buffering system (20). The inlet heat transfer system (21), transfer the heat by conduction into heat exchanger tanks low vapour pressure fluid mixed with salty material or without (19). The heat

exchanger tank(s) (22) keeps the pressurized air tank(s) (23). Temperature sensor (16) and pressure sensor (17) are fixed inside the buffering system tanks (13) and a held up by temperature and pressure sensors holder (18). Pressurized air enters the heat exchanger system through air pipe (24). Non return pressure control valve (25) controls the air pressure entering the heat exchanger system to the pressurized air tank(s) (23). In the case of multiple pressurized air tanks, the pressurized air is transferred to the other pressurized air tank(s) through air pipe (26). Fin(s) (27) are fixed inside the pressurized air tank(s) (23) so as to maximize heat exchange efficiency. The air temperature and pressure inside the pressurized air tanks are sensed by the temperature sensor (16) and pressure sensor (17). The hot air is then released for use through hot air outlet pipe (28) via air pressure control valve (29). At the bottom of the pressurized air tank (s) (23) connected system condensate removing pipe (33) and gate valve (34) to control the remove of the condensate. In order to control temperature loss inside the system, all components mentioned hereby are insulated by appropriate heat insulation material (30) and enclosed by the heat exchanger system housing (31) except the externals of the inlet air pipe (24), outlet air pipe (28), air pressure control valves (25) and (29), inlet of the heat transfer system (21) of the heat exchanger system and its outlet (32), condensates removing pipe (33) and gate valve (34).

In still its preferred embodiment, as illustrated in FIG. 4, the heat storage system comprises: storage housing (35), which encloses the heat insulation materials (15), heat storage tank(s) (36), part of inlet heat transfer system of the heat storage system (37), temperature sensor (16) and pressure sensor (17), temperature and pressure holder (18) in each tank, pieces of irregular shape objects capable of absorbing and storing heat (38), and part of outlet heat transfer system of the heat strorage system(39).

Excess heat from the heat exchanger system FIG. 3 transferred by conduction to the heat storage system (FIG. 4), through the heat transfer system of the outlet of the heat exchanger system (32) to the inlet of the heat storage system (37). The heat is transferred to the heat storage tanks (36) from the bottom of the heat storage tanks (36), the means of transfer is through the low vapour pressure fluid mixed with salty material or without (19). The transferred heat inside the heat storage tanks (36) is absorbed by the and stored by the pieces of irregular shape objects

capable of absorbing and storing heat (38). As per need the excess heat in the heat storage tanks (36) will be transferred and stored to similar heat storage system through part of outlet heat transfer system of the heat storage system (39). Otherwise, the end of the part of outlet heat transfer system of the heat storage system (39) is closed by any means.

Furthermore, in its preferred embodiment as illustrated in FIG.5, the air supply system comprises: powered compressor (40); air pipes (41) and air filter and cleaner (42) and various connection devices. The compressor (40) supply filtered and cleaned pressurized air to the heat exchanger FIG. 3 through heat exchanger system air inlet pipe (24).

CLAIMS

1. A solar heated air system, comprising:

a heat harvesting system to collect the heat energy from solar;

a heat absorbing system to absorb heat collected from the heat collector;

a heat transferring system for transferring the absorbed heat to the heat buffering system;

a heat buffering system for balancing heat on clouding times during the day;

a heat exchange system to allow utilization of the stored heat by heating up compressed air in the heat storage tanks;

a heat storage system for storing excess heat for later use when in need especially during the night or in on heavy clouded or rainy day; and

an air supply system.

2. The solar heated air system, as claimed in claim 1, whereby the heat harvesting system, comprises:

a parabolic concentrator (any type of solar concentrator can work) for collecting heat energy from the sun rays;

a highly heat reflector film at the concave side;

a variable angle tilting structure for holding the parabolic concentrator and allowing the parapolice concentrator to follow the sun rays; and

a ground structure for mounting the tilting structure.

3. The solar heated air system, as claimed in claim 1, whereby the heat absorbing system comprises:

a big diameter pipe and a small diameter pipe held by plates separating them, arranged in such a way that the plates do not create rooms within the pipes;

a heat absorbing material covers up outside of both pipes;

a pipe back cover plate with a hole not more than the outside diameter of the small pipe to cover back side of the pipes;

an air valve to be placed in pipes back plate for air inside the small diameter pipe when fluid is put in the system, preferably low vapour pressure fluid;

a pipes front cover plate with a diameter not bigger than the outside diameter of small pipe to cover the front side of the pipes;

a heat insulated coupling attached to the front end of the pipes which will be used to couple the heat absorbing system and the heat transfer system; and

a vacuum valve attached to the outside big pipe to be used to remove air between the big pipe and small pipe chamber so as to create and maintain vacuum inside the pipes.

4. The solar heated air system, as claimed in claim 1, whereby heat transfer system between heat absorber system and heat buffering system comprises:

a low vapour pressure fluid, preferably low vapour pressure fluid mixed with salty material for transferring the harvested heat from the heat absorber to the heat buffering system;

a heat insulated pipe for holding low vapour pressure fluid, preferably low vapour pressure fluid mixed with salty and transferring heat between heat absorber and heat buffering system; and

insulated couplings at both ends of the system for connecting the heat absorber system and the heat buffering system.

5. The solar heated air system, as claimed in claim 1, whereby heat buffering system comprises:

a housing keeping the interconnected tanks surrounded by heat insulation materials;

an interconnected tank filled with fluid, preferably low vapour pressure fluid for keeping transferred heat constant, this could be one up to several;

a temperature sensor is fixed in the interconnected tank(s);

a pressure sensor is fixed in the interconnected tank(s);

a buffer pipe connected between heat transfer system, the interconnected tanks and heat exchanger system for transferring heat between the systems and components; and

couplings fixed at ends of the buffer pipe to connect the heat transfer system, the tanks and the heat exchanger system.

6. The solar heated air system, as claimed in claim 1, whereby heat transfer system between heat buffering system and heat exchanger system comprises:

a fluid, preferably low vapour pressure fluid, mixed with salty material or without for transferring the absorbed heat between the heat buffering system and the heat exchanger;

a heat insulated pipe for holding fluid, preferably low vapour pressure fluid, mixed with salty material or without or without and transfering heat between the heat buffering system and the heat exchanger; and

insulated couplings at both ends of the system for connecting the heat buffering system and the heat exchanger system.

7. The solar heated air system, as claimed in claim 1, whereby the heat exchanger comprising:

an insulated heat exchanger housing for enclosing heat exchanger components;

a cylinder(s) for storing pressurized air;

heat exchanger pipe with couplings at the inlet and outlet for coupling the heat transfer system between the heat buffering system and the heat storage system as well in the heat exchanger tanks ;

a tank(s) filled with low pressure fluid, mixed with salty material or without for immersing a cylinder for storing presurized air;

fins are fixed inside the cylinder to facilitating het exchange;

a tempreture sensor is fixed in each cylinder;

a pressure sensor is fixed in each cylinder;

inlet and outlet air pipes fixed at the sides of the heat exchanger housing to the and out of the pressurized air cylinders;

a non-return inlet air pressure control value is attached to inlet pipe of the heat exchanger system before pressurized air enters the system;

a non-return outlet air pressure control value is attached to outlet pipe of the heat exchanger system before pressurized air leaves the system;

inlet and outlet air pipes for connecting the cylinders within the heat exchanger system; and

interconnected pipes for condensate collection at the bottom of the cylinder; and

a get value to let the condensate out of the system.

8. solar heated air system, as claimed in claim 1, whereby heat transfer system between heat exchanger system and heat storage system comprises:

a fluid, preferably low vapour pressure fluid, mixed with salty material or without for transferring the absorbed heat between the heat the heat exchanger system and the heat storage system;

a heat insulated pipe for holding fluid, preferably low vapour pressure fluid, mixed with salty material or without and transferring heat between the heat exchanger system and the heat storage system; and

insulated couplings at both ends of the system for connecting the heat exchanger system and the heat storage system.

9. solar heated air system, as claimed in claim 1, whereby a heat storage system comprises:

an insulated heat storage housing for enclosing heat storage components;

a tank(s) filled with pieces of irregular shape objects capable of absorbing and storing heat which is then filled with low pressure fluid, mixed with salty material or without;

an insulated heat transfer pipe with couplings at the inlet and outlet for coupling between the heat exchanger system and the heat storage system;

an insulated inlet pipe with coupling at one end and other end connected at the bottom of tank(s), the other end is connected to the insulated heat transfer pipe installed between the heat exchanger system and the heat storage system;

a temperature sensor is fixed in each tank;

a pressure sensor is fixed in each tank;

an outlet air pipes fixed at the top of tank(s) for transferring fluid, preferably low vapour pressure fluid, mixed with salty material or without to other heat storage units as per heat energy requirements and used for filling in the fluid in the system.

10. The Solar heated air system, as claimed in claim 1, and 8, whereby the air supply system comprising:

a powered air compressor by any energy source preferably solar energy capable of supplying enough air to the heat exchange system as per requirements; and

air pipes connecting the compressor and a hybrid air filter and drier to ensure that clean and dry air goes into the heat exchanger system.

C. ABSTRACT

A solar heated air system, is provided in this invention. This invention comprises: a heat harvesting system to collect the heat energy from solar; heat absorbing system to absorb heat collected from the heat collector; heat transferring system for transferring the absorbed heat to the heat buffering system; heat buffering system for balancing heat on clouding times during the day; heat exchange system to allow utilization of the stored heat by heating up compressed air in the heat storage tanks; heat storage system for storing excess heat for later use when in need especially during the night or in on heavy clouded or rainy day; and air supply system. The system utilizes appropriate fluid for transferring heat between the different systems and dry heated air for carrying heat energy for domestic and industrial utilization for various purposes.

D. DRAWINGS

The accompanying figures are included to provide an understanding of the principle on which the present invention is based. The figures illustrate the exemplary embodiment of the present invention, which together with the ways of implementing the invention, serves to explain the principles underlying the present invention. The figures are for illustrations only that thus is not a limitation to the present invention.

FIG. 1 illustrates the solar heat concentrator for harvesting the solar heat energy;

FIG. 2 illustrates the heat buffering system;

FIG. 3 illustrates the heat exchanger system;

FIG. 4 illustrates the heat storage system;

FIG. 5 illustrates the air supply system.

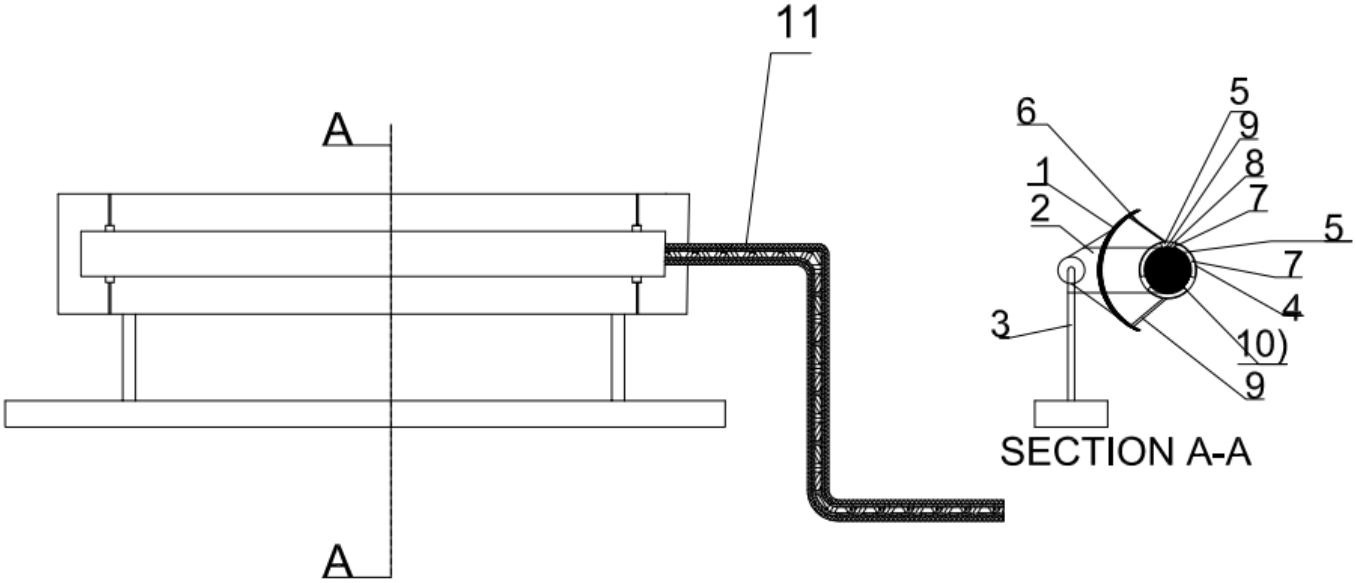

FIGURE 1

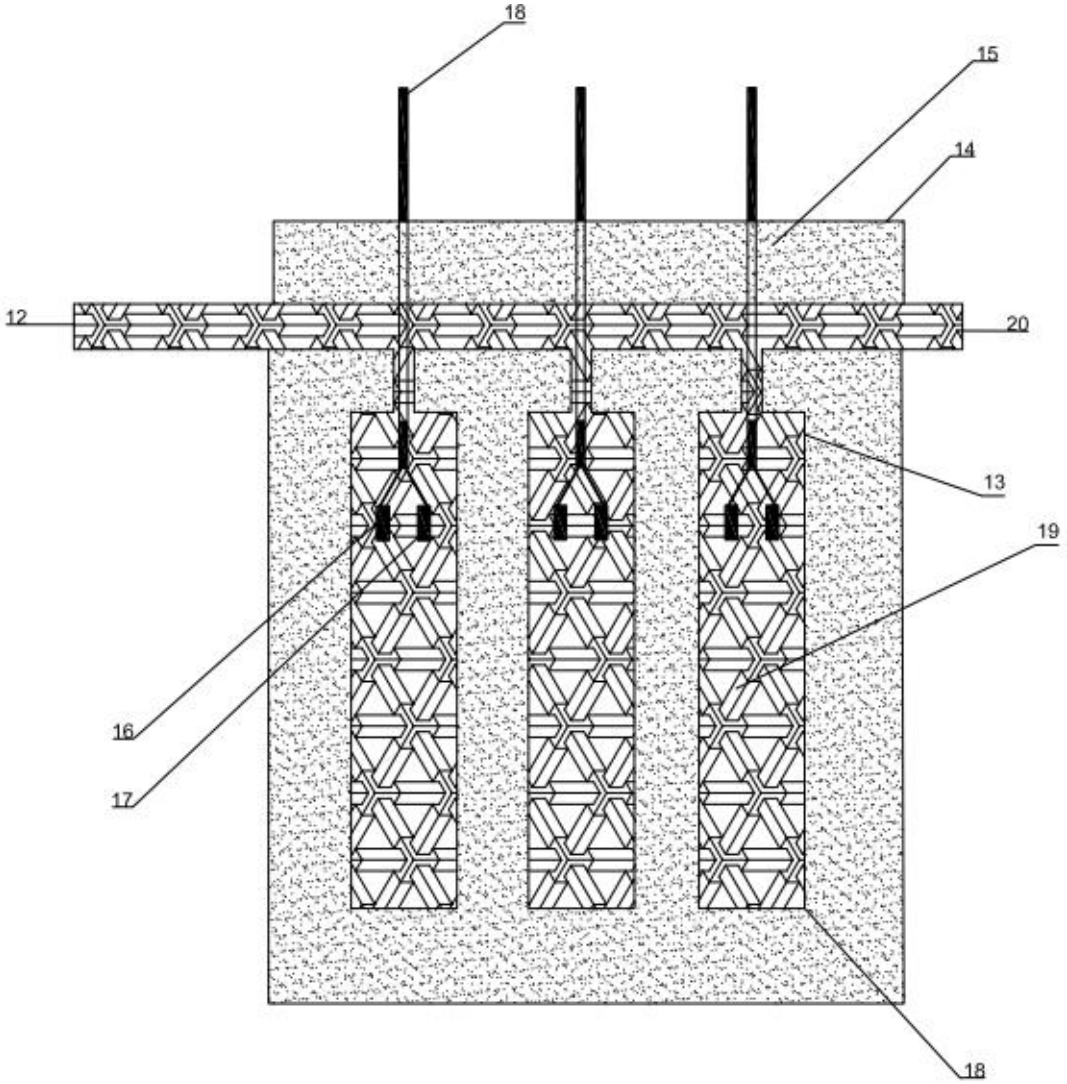

FIGURE 2

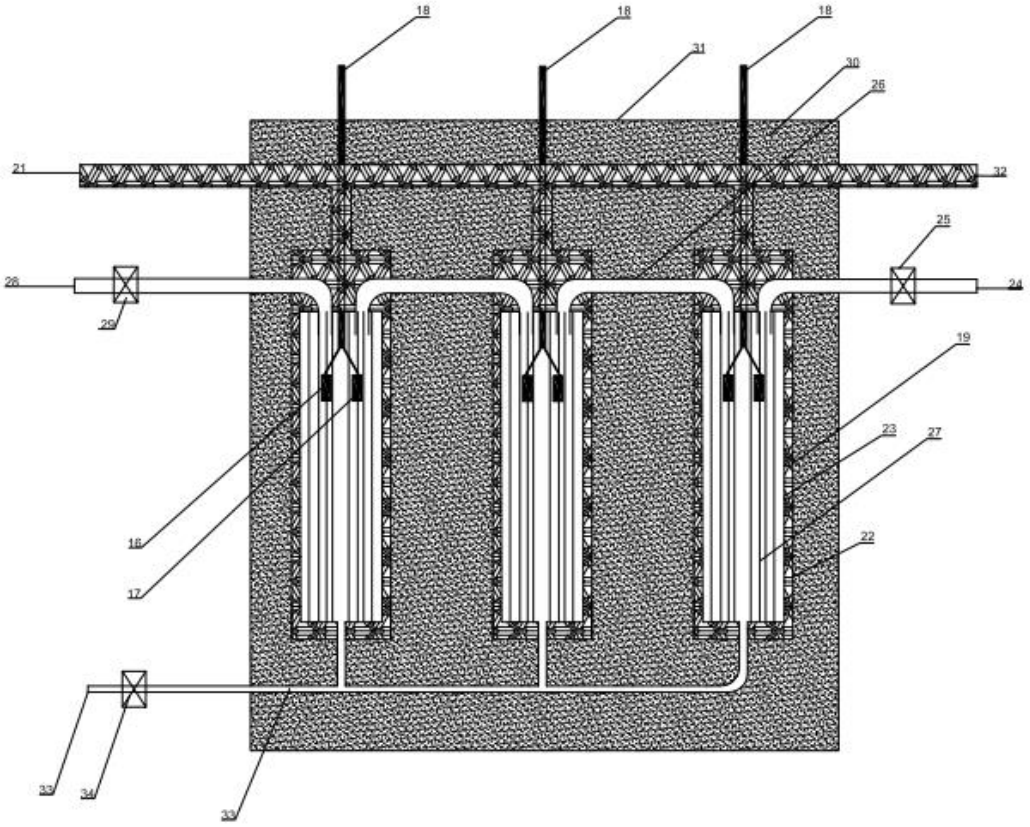

FIGURE 3

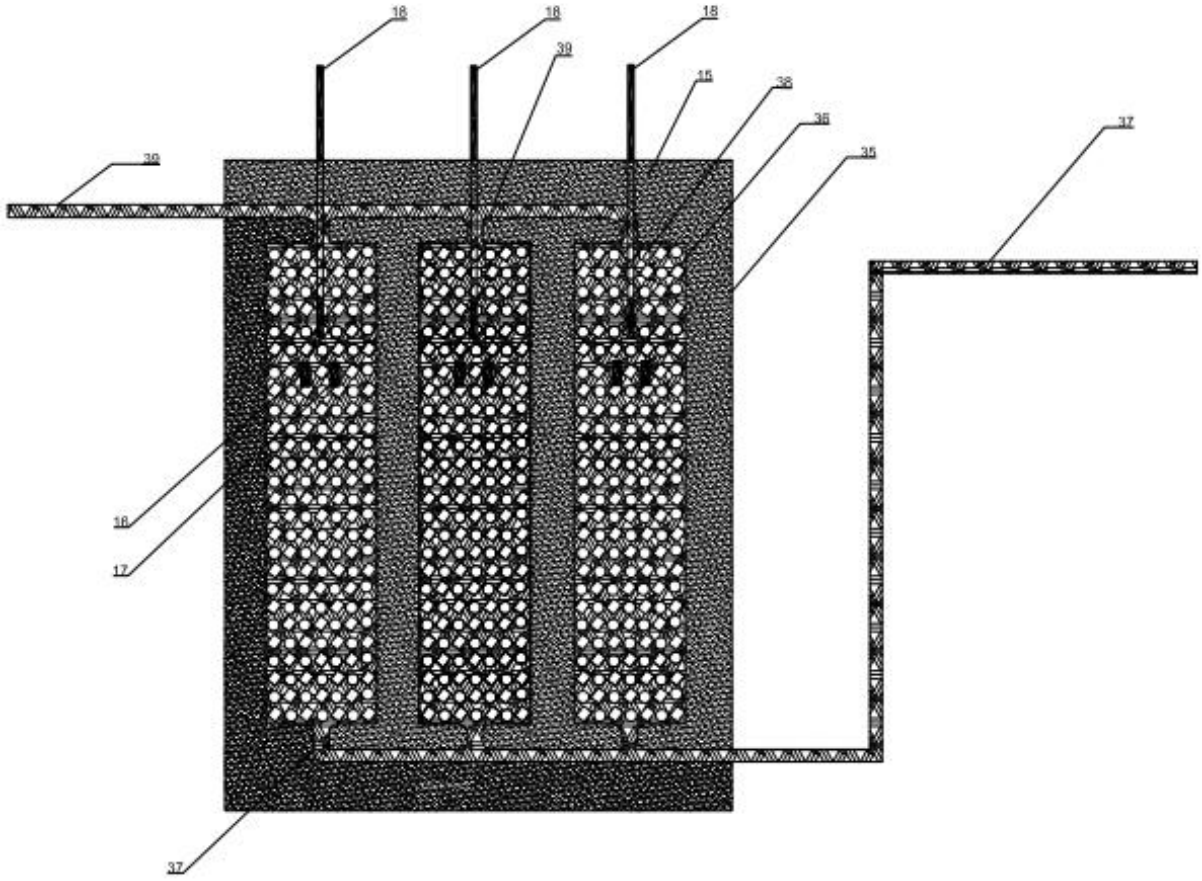

FIGURE 4

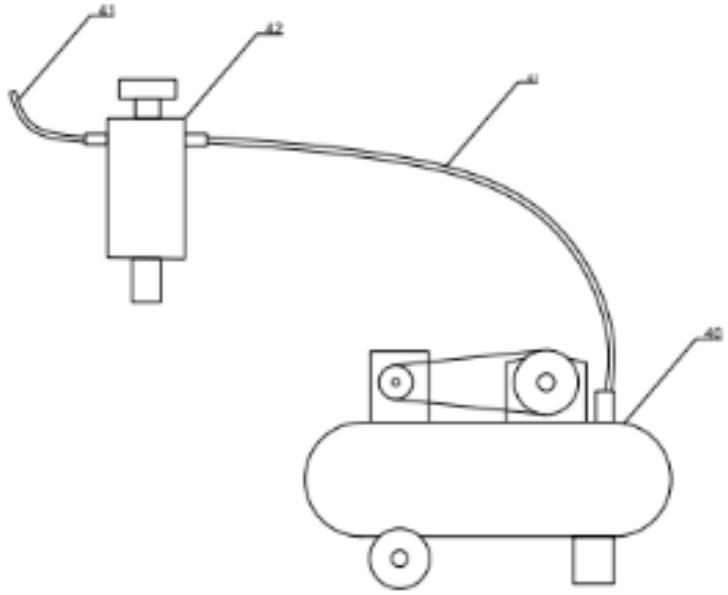

FIGURE 5